Double Bubble®

Family Product Bulletin

PPC® Innovate. Connect.
A BELDEN BRAND

A fully integrated compression tool and connector system to ensure a secure, permanent connection for most popular coaxial cables.

Double Bubble® Compression Connectors

Features

- RG6 and RG59 universal connectors for standard through quad-shield cable
- The permanent 360° water-tight seal on the cable provides superior pull-out strength reducing signal ingress and egress
- One-piece design eliminates loose pins and sleeves minimizing installation time
- Non-blind entry sets the pin at the back of the connector making insertion of the cable easier



Plenum Connectors

- F, RCA and BNC for RG6 and RG59 Plenum cables
- Custom designed connectors provide an easy to install, precise fit on a variety of plenum cable types

Security (CCTV) Connectors

- RCA and BNC for Security (CCTV) RG59 cables
- Security connectors are designed for CCTV coaxial cable with copper braiding and a solid copper center conductor
- For ease of installation use the Cable Pro® FIT-6 or FIT-59 Insertion tool

High Definition BNC Connectors

- Combined patented technologies (PTFE Insulator) with a proprietary manufacturing process to ensure a superior quality signal

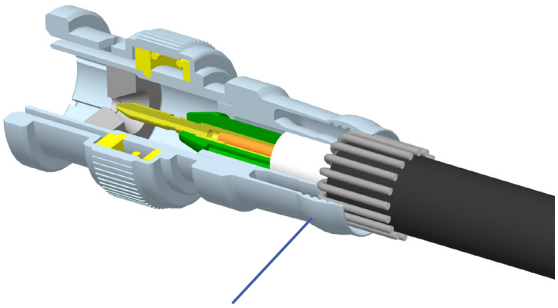

360° radial compression forms an environmental seal around the cable

RGB/Mini Coax Connectors

- RCA and BNC connectors
- RGB/Mini coaxial connectors are available in two sizes:
  - RG15 (22-24 AWG), purple
  - RG1 (24-26 AWG), orange

Cable Pro Compression Tool

- System creates two 360º points of compression on the cable to provide a permanently sealed Double Bubble® compression
- Works exclusively with PPC's Double Bubble™ compression connector series
- Made from heat treated high carbon steel for maximum strength and durability
- Fixed compression dies inside the tool and the self-adjusting plunger head provide consistent compression without having to recalibrate after each use
- Tool is designed as a one -step, one-tool system

Double Bubble® Kit

- DBSTARTERKIT features a quick-start solution to the Double Bubble® system that includes Cable Pro® tools, a variety of DB® connectors and accessories
- DBPSAKIT features the Double Bubble® compression tool and PSA59/6 cable strip tool in one kit

6176 East Molloy Road • East Syracuse, NY 13057-0278 • Tel: 315-431-7200 • Fax: 315-431-7201 • E-mail:ppc@ppc-online.com • www.ppc-online.com

PPC
Innovate. Connect.
A BELDEN BRAND



Double Bubble® Radial Bubble Compression Tool

Cable Pro® Double Bubble® Compression Tool

Part Number	Description
CPLCRBC-BR	Double Bubble Radial Bubble Compression Tool
LMTIP-S	Silver Adapter Tip for Silver/Nickel Connectors
RBCTIP-UHF	Adapter Tip for DB58UHF 50 Ohm Connector
LMTIP-HOLDER	Holder for Adapter Tips



Double Bubble® Compression Connectors

Double Bubble® Universal Compression Connectors

Part Number	Description	Tip Required	Tool Required
DB6U	RG6 F-Type Connector	LMTIP-S	CPLCRBC-BR
DB6BNCU	RG6 BNC Connector	NONE	CPLCRBC-BR
DB6RCAU	RG6 RCA Connector	LMTIP-S	CPLCRBC-BR
DB59U	RG59 F-Type Connector	LMTIP-S	CPLCRBC-BR
DB59BNCU	RG59 BNC Connector	NONE	CPLCRBC-BR
DB59RCAU	RG59 RCA Connector	LMTIP-WP	CPLCRBC-BR



Plenum and Security (CCTV) Compression Connectors

Plenum and Security (CCTV) Compression Connectors

Part Number	Description	Tip Required	Tool Required
DB6PL2	RG6 F-Type Plenum Size 2 Connector	LMTIP-S	CPLCRBC-B
DB6BNCPL2	RG6 BNC Plenum Size 2 Connector	NONE	CPLCRBC-B
DB6RCAPL2	RG6 RCA Plenum Size 2 Connector	LMTIP-S	CPLCRBC-B
DB59PL2/4	RG59 F-Type Plenum Size 2/4 Connector	LMTIP-S	CPLCRBC-B
DB59BNCPL2/4	RG59 BNC Plenum Size 2/4 Connector	NONE	CPLCRBC-B
DB59BNCPL3	RG59 BNC Plenum Size 3 Connector	NONE	CPLCRBC-B
DB59BNCSL	RG59 BNC Security (CCTV) Connector	NONE	CPLCRBC-B
DB59RCASL	RG59 RCA Security (CCTV) Connector	LMTIP-S	CPLCRBC-B



High-Def BNC Compression Connectors

High-Def BNC Compression Connectors

Part Number	Description	Tip Required	Tool Required
DB6BNCHD	BNC, 1-Piece Compression Connector with PTFE Insulator	-	CPLCRBC-B
DB59BNCHD	BNC, 1-Piece Compression Connector with PTFE Insulator	-	CPLCRBC-B
DB15BNCHD	BNC, 1-Piece Compression Connector with PTFE Insulator for 22-24AWG cable	-	CPLCRBC-B
DB1BNCHD	BNC, 1-Piece Compression Connector with PTFE Insulator for 24-26AWG cable	-	CPLCRBC-B



RGB/Mini Coax Compression Connectors

RGB/Mini Coax Compression Connectors

Part Number	Description	Tip Required	Tool Required
DB1BNC	RGB/Mini Coax (24-26AWG) BNC Connector	NONE	CPLCRBC-B
DB1RCA-R*	RGB/Mini Coax (24-26AWG) RCA Connector	LMTIP-S	CPLCRBC-B
DB15RCA-R	RGB/Mini Coax (22-24AWG) RCA Connector	LMTIP-S	CPLCRBC-B

**Mini RCA connectors only available in retail tube packaging ending "-R"*



DS3 and DS4 Compression Connectors

DS3 and DS4 Compression Connectors

DS3 and DS4 connectors are a highly secure, dependable broadband connector solution that exceeds performance and signal quality standards

Part Number	Description	Tip Required	Tool Required	Belden Cable
DBDS3BNC	BNC Connector for 735 Cable	NONE	CPLCRBC-B	735A*
DBDS4BNC	BNC Connector for 734 Cable	NONE	CPLCRBC-B	734D1, 734D1T
DBDS4BNCPL	BNC Connector for 734 Plenum Cable	NONE	CPLCRBC-B	734A1P



50 Ohm Compression Connectors

50 Ohm Compression Connectors

Compression is easier and more reliable than a crimp-on or soldered connector

Part Number	Description	Tip Required	Tool Required	Belden Cable
DB58BNC	BNC 50 Ohm Connector	NONE	CPLCRBC-B	8240
DB58UHF	UHF Antenna 50 Ohm Connector	RBCTIP-UHF	CPLCRBC-B	8240



Double Bubble Starter Kit and Tech Express Tool Kit

Double Bubble® Kits

Part Number	Description
DBSTARTERKIT	Includes Cable Pro® Cable Strip Tool, Compression Tool and a variety of DB Connectors
DBPSAKIT	Includes Cable Pro® Cable PSA59/6 Strip Tool and CPLCRBC-B Compression Tool

Belden Cable to Double Bubble® Connector Cross Reference Chart

Double Bubble® Compression Connectors

Part Number	Cable Description	F Connector	RCA Connector	BNC Connector
Analog Video Cable				
8212	RG 59 BC Braid	-	DB59RCASL	DB59BNCSL
8218	70 Ohm Mini Coax 27 AWG TC Braid	-	DB15RCA-R	DB15NCHD
8221	RG 59 BC Braid Outdoor	DB59U	DB59RCAU	DB59BNCU
8241	RG 59 CM BC Braid	-	-	DB59BNCBU
8263	RG 59 CMX BC Braid	DB59U	DB59RCAU	DB59BNCU
9240	RG 59 BC Braid	-	DB59RCASL	DB59BNCSL
9244	RG 59 CMX BC Braid	DB59U	DB59RCAU	DB59BNCU
9248	RG 6 CM Duofoil	DB6U	DB6RCAU	DB6BNCU
9259	RG 59 CM BR Braid	DB59U	DB59RCAU	DB59BNCU
9290	RG 6 CM 2 BC Braids	DB6U	-	-
CATV Cable				
9058	RG 6 CATV, CM Duobond Plus 77%	DB6U	DB6RCAU	DB6BNCU
9062	RG 6 Duobond Plus, 77%	DB6U	DB6RCAU	DB6BNCU
9066	RG 6 Duobond II 60%	DB6U	DB6RCAU	DB6BNCU
9077	RG 6 CATV - CM pair Duobond II 60%	DB6U	DB6RCAU	DB6BNCU
9104	RG 59 CATV - CM	DB59U	DB59RCAU	DB59BNCU
9110	RG 59 CATV - CM Duobond III	DB59U	DB59RCAU	DB59BNCU
9116	RG 6 CATV - CM Duobond II 50%	DB6U	DB6RCAU	DB6BNCU
9118	RG 6 CATV CM Duobond III 60%	DB6U	DB6RCAU	DB6BNCU
9167	RG 59 CATV - CMR Duobond Plus	DB59U	DB59RCAU	DB59BNCU
82108	RG 59 CATVP - CMP Duofoil	DB59U	DB59RCAU	DB59BNCU
82120	RG 6 CATV - CMP Duofoil Flamarrest	DB6PL2 DB6U	DB6RCAPL2 DB6RCAU	DB6BNCPL2 DB6BNCU
87120	RG 6 CATVP - CMP Duofoil	DB6PL2	DB6RCAPL2	DB6BNCPL2
89108	RG 59 CATVP - CMP Duofoil	DB59PL2/4	DB59RCAPL2/4	DB59BNCPL2/4
89120	RG 6 CATVP - CMP Duofoil	DB6PL2	DB6RCAPL2	DB6BNCPL2
633938	RG 6 Duofoil	DB6PL2	DB6RCAPL2	DB6BNCPL2
1186A	RG 59 CATV - CM Duobond IV	DB59U	DB59RCAU	DB59BNCU
1189A	RG 6 CATV - CM Duobond IV, 60% & 40%	DB6U	DB6RCAU	DB6BNCU
1189AP	RG 6 CATV - CMP Duobond IV 60% & 40%	DB6PL2	DB6RCAPL2	DB6BNCPL2
CCTV Cable				
533945	RG 6 CM	DB6U	DB6RCAU	DB6BNCU
543945	RG 59 CM	DB59U	DB59RCAU	DB59BNCU
573945	RG 59 Mini CM	-	DB15RCA-R	1855ABHD1
633948	RG 6	DB6PL2	DB6RCAPL2	DB6BNCPL2
639948	RG 6	DB6PL2	DB6RCAPL2	DB6BNCPL2

Part Number	Cable Description	F Connector	RCA Connector	BNC Connector
Analog Video Cable				
82241	RG 59 CMP BC Braid	-	-	DB59BNCPL3
82248	RG 6 CMP Duofoil	DB6PL2	DB6RCAPL2	DB6BNCPL2
82259	RG 59 CMP BC Braid	DB59PL2	DB59RCAPL2	DB59BNCPL2
88241	RG 59 CMP BC Braid	-	-	DB59BNCPL3
89248	RG 6 CMP Duofoil	DB6PL2	DB6RCAPL2	DB6BNCPL2
1281R	25AWG Mini CMR Duobond	-	DB1RCA-R	DB1BNCHD
1426A	RG 59 CM BC Braid	-	DB59RCASL	DB59BNCSL
8241A	RG 59 CMG BC Braid	-	-	DB59BNCBU
8241F	RG 59 BC Braid	-	-	DB59BNCBU
CATV Cable				
1190A	RG 6 Duobond IV 60% + 40%	DB6U	DB6RCAU	DB6BNCU
1505F	RG 59 CM TC Double Braid	DB59U	DB59RCAU	DB59BNCU
1530A	RG 6 CATV - CM Duobond II 90%	DB6U	DB6RCAU	DB6BNCU
1530AP	RG 6 CATVP - CMP Duobond II	DB6PL2	DB6RCAPL2	DB6BNCPL2
1532A	RG 6 Duobond II 90%	DB6U	DB6RCAU	DB6BNCU
1613A	RG 6 CATV, CM Duobond III 77%	DB6U	DB6RCAU	DB6BNCU
1614A	RG 6 Duobond III 77%	DB6U	DB6RCAU	DB6BNCU
5339B5	RG 6 Duofoil	DB6U	DB6RCAU	DB6BNCU
5339G5	RG 6 CATV, CMD Beldfoil 50%	DB6U	DB6RCAU	DB6BNCU
5399B5	RG 6 Duobond	DB6U	DB6RCAU	DB6BNCU
6339Q8	RG 6 CMP QuadShield	DB6U	DB6RCAU	DB6BNCU
6439B8	RG 59 Duofoil	DB6PL2	DB6RCAPL2	DB6BNCPL2
6439C8	RG 59 CMP Duofoil	DB59PL2	DB59RCAPL2	DB59BNCPL2
7916AP	RG 6 CATV CMP Duobond IV	DB6U	DB6RCAU	DB6BNCU
9104P	RG 59 CATVP - CMP Duobond II	DB59U	DB59RCAU	DB59BNCU
9116P	RG 6 CATVP - CMP Duobond II	DB6PL2	DB6RCAPL2	DB6BNCPL2
9116R	RG 6 CATVR - CMG Duobond II 60%	DB6U	DB6RCAU	DB6BNCU
CCTV Cable				
643948	RG 59 Plenum	DB59PL2/4	DB59RCAPL2/4	DB59BNCPL2/4
649948	RG 59 Plenum	DB59PL2/4	DB59RCAPL2/4	DB59BNCPL2/4
673948	RG 59 Mini	DB15	DB15RCA-R	1855ABHD1
5339W5	RG 6 Duofoil	DB6U	DB6RCAU	DB6BNCU

6176 East Molloy Road • East Syracuse, NY 13057-0278 • Tel: 315-431-7200 • Fax: 315-431-7201 • E-mail:ppc@ppc-online.com • www.ppc-online.com